LINEAR

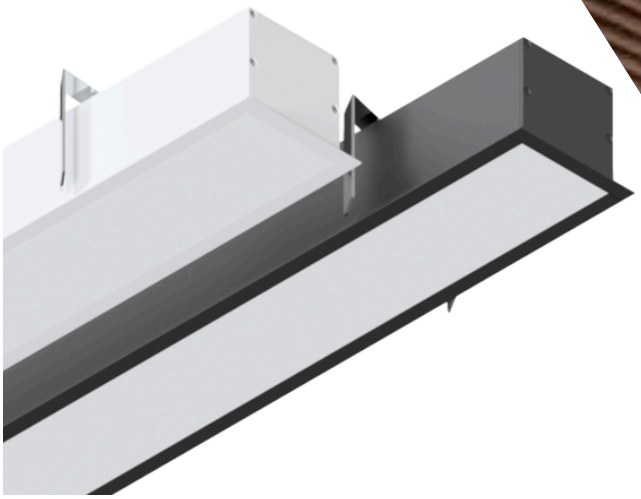

# TRUE 80 R
## RECESSED

LED

Introducing the **TRUE 80 R Recessed** linear LED light. The **TRUE 80 R Recessed** can be configured for multiple continuous runs, also angles.

LIGHT ALLIANCE
Projects (PTY) Ltd.
*Partners in **Lighting Solutions***

LINEAR

# TRUE 80 R
# RECESSED

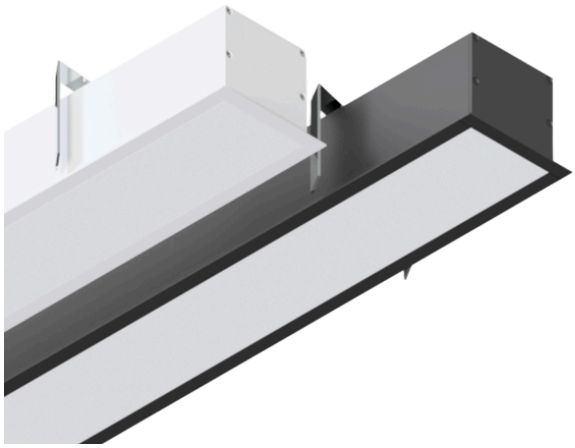

LED IP 20 DALI

## APPLICATIONS

- Public Buildings
- Industrial Developments
- Ablutions
- Commercial Developments
- Retail Developments
- Shopping Malls

## PRODUCT SPECIFICATIONS

| | |
|---|---|
| LED Driver | Internal |
| Input Voltage | 220-240 V |
| Dimming Options | DALI, Other |
| Flicker Rating | < 5% |
| Low Ripple Current | Yes |
| Light Source | LED |
| Power Factor | > 0.9 |
| Available CCT | 3000K, 4000K, Other |
| CRI | > 80 |
| Lifetime | Up to 50 000 hours |
| Application Temperature | -10°C to 50°C |
| Available Emergency | 1-3 Hours |
| Warranty | 5 Years - T's & C's apply |
| IP Rating | 20 |
| Housing Material | Extruded Aluminium |
| Finish | Natural, White, Black |
| Diffuser Material | PMMA UV Stabilized |
| Mounting | Recessed |

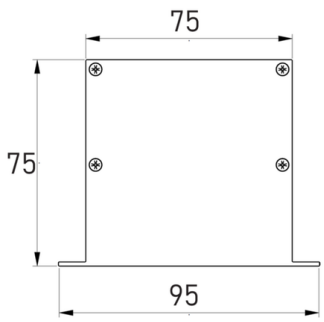


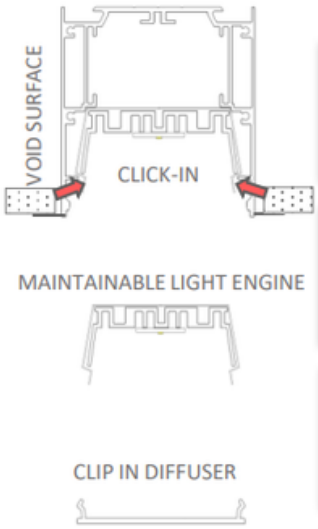


| Luminaire W/meter | Output (Lumens) | Colour Temperature | Efficiency (lm/W) | CRI Rating | Driving Current | Forward Voltage (V/m) | Reference Code |
|---|---|---|---|---|---|---|---|
| 24 | 4100 | 3000K | 173 | >80 | 300mA | 78.3V | LARLT80-SO-3K |
| 24 | 4300 | 4000K | 181 | >80 | 300mA | 78.3V | LARLT80-SO-4K |
| 50 | 8700 | 3000K | 172 | >80 | 350mA | 141.6V | LARLT80-HO-3K |
| 50 | 8890 | 4000K | 176 | >80 | 350mA | 141.6V | LARLT80-HO-4K |

LIGHT ALLIANCE
Projects (PTY) Ltd.
*Partners in **Lighting Solutions***

Disclaimer:
Component manufacturer data is used and could vary +-10%
We reserve the right to amend or change data without prior notification.
E&OE